Castano Primo 29/07/10

TRMX 257/1-C/RX-A3 PRESENTATION

The new monoblock single stage vary port design liquid ring vacuum pump TRMX 257/1 introduces a new and innovative design that improves the characteristics of the previous TRMB 32-50, which has been considered a excellent pump in the market. The monoblock construction results to be much more compact, the ergonomic construction facilitate the maintenance, the actual softened noise level, the new performances and warranted reliability are the result from Pompetravaini experience and the end users opinions and suggestions.

TRMX 257/1-C/RX-A3

Replaces: TRMB 32-50

Competitors: look Commercial information

Threaded connections - G 1

Service liquid connection - G 1/4

Anticavitation connection - G 1/8

Mechanical seal UNI EN 12756 - Ø24

Max capacity at 50 Hz – 54 m^3/h

Max capacity at 60 Hz – 65 m^3/h

E-motor IEC B34 frame 90 L

Installed power 2.2 kW (3 Hp) – 2 poles
Multi cycles at 50 /60 Hz

RPM a 50 Hz 2900 *(Voltage see point 19-20)*

RPM a 60 Hz 3500 *(Voltage see point 19-20)*

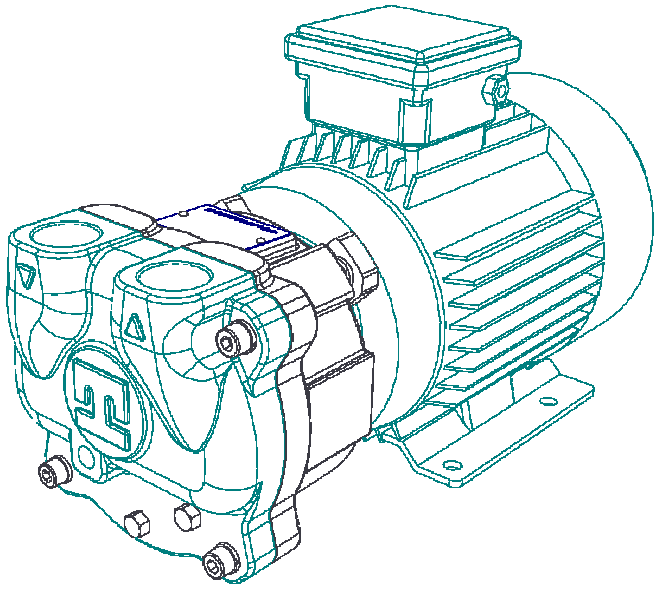

Average service liquid consumption 0.21 m^3/h

Volume width x height x length including e-motor (only of our supply)

170 mm x 228 mm x 406.5 mm

The complete pump volume is 15% lower compared to the previous liquid ring vacuum pump TRMB 32-50.

Volume width x height x length of pump only

159.5 mm x 156.5 mm x 141.5 mm

The pump self volume is 50% lower compared to the previous liquid irng vacuum pump TRMB 32-50.

Total pump weight 25 Kg

The pump weight is 10% lower compared with the previous liquid ring vacuum pump TRMB 32-50.

ISO 9001 Ex

Domicilio Fiscale – Direzione – Stabilimento – Uffici:
20022 CASTANO PRIMO (MI) Italy – Via per Turbigo, 44 – Zona Industriale
Tel. 0331 889000 – Fax 0331 889090 – E-Mail sales@pompetravaini.it

Capitale Sociale. € 2.000.000. I.V. C.F. e Partita IVA IT 00692920150
REA n. 720774 della C.C.I.A.A. di Milano

COMMERCIAL INFORMATION : COMPETITORS

Brand	*Pompa*	*Brand*	*Pompa*
SIHI	LEM 50/51	NASH ELMO	2BV2061
ROBUSCHI	RVS 3	NASH ELMO	2BV7061
FINDER	MEX 50	SPECK	V55

FUNCTIONAL INFORMATION

High performances - 10 al 20% over the TRMB 32-50 performance curve

Performances are higher on entire diagram curve compared to our pump TRMB 32-50. This result is consequence of improving the hydraulic design and the impeller blades profile.

Low service liquid consumption – 40% less compared to TRMB 32-50

The service liquid consumption is lower on the entire diagram curve compared to our pump TRMB 32-50 while the liquid suction capabilities content with in suction gases remains unchanged.

Low noise level – xx db less compared to TRMB 32-50

The noise level is lower because the new hydraulic design permits a gas flow through the pump more smooth and reduces greatly the turbulences. This data will be available in September.

Duty and operation at 50 e 60 Hz with only one Multi cycles e- motor

The duty is warranted for 1.5 and 2.2 kW power, supplied by only one multi cycles e-motor (50 e 60 Hz) frame IEC 90 L and installed power of 2.2 kW. Specifically the pump supplies the following standard characteristics:

Pump	Hz=50	Q=54 m3/h	P=1.5 kW (2 Hp)	RPM=2900	e-motor IEC 90 L
Pump	Hz=60	Q=65 m3/h	P=2.2 kW (3 Hp)	RPM=3500	e-motor IEC 90 L

CONSTRUCTIVE PUMP INFORMATION

Monoblock construction. Impeller is mounted directly on shaft e-motor reducing overall dimensions.

Pump less components permits and easy and fast assembly during maintenance

Hydraulic port plate is not part of the front casing casting and is always in stainless steel, also for standard materials of construction version. Enhanced performance increase reliability, longevity and warrants stable performances through time.

Hydraulic port plate is mounted inserted on the impeller housing permits a better sealing of liquid gaskets.

A Nord-Lock washer permits an ultra safe impeller locking by means of an hexagonal nut.

Mechanical seal diameter 24mm is mounted directly on ground shaft and is to ISO 3069/UNI EN 12756 standards.

Burgmann MG12-G60 standard mechanical seal and standard materials of construction Viton/Silicum Carbide/Carbon (A.Q1.V.GG) is suitable for the most common duties.

Axial rotor clearance settings is done easily and precisely through external screws, locking the pump/e-motor assembly, by means of inserting shims between the impeller housing and e-motor flange.

Domicilio Fiscale – Direzione – Stabilimento – Uffici:
20022 CASTANO PRIMO (MI) Italy – Via per Turbigo, 44 – Zona Industriale
Tel. 0331 889000 – Fax 0331 889090 – E-Mail sales@pompetravaini.it

Capitale Sociale. € 2.000.000. I.V. C.F. e Partita IVA IT 00692920150
REA n. 720774 della C.C.I.A.A. di Milano

E-MOTOR CHARACTHERISTS

E-motor IEC B34, with dimensions standardized according to IEC 72-1 norm, with longer shaft and and locked bearing on drive end.

One e-motor IEC B34 frame 90L 2.2KW(3Hp) for both 50 and 60Hz - 2900 rpm and 3500 rpm.

E-motor IEC B34 frame 90L multi cycles and multi tensions. It may operates at 50 and 60Hz as per nameplate tensions. Specifically the, normally in use, Lafert brand e-motor has following characteristics:

Volt:230/400-2.2kW 50Hz
Volt:230/400-2.3kW 60Hz
Volt:265/460-2.5kW 60Hz

E-motor IEC B34 fram 90L according to norm IEC 60034-30 and Efficiency Class IE2 (compulsory starting from June 2011 in Europe). Available for e-motors with shaft in AISI 420 and AISI 316.

E-motor IEC B34 frame 90L according norm IEC 60034-30 and Efficiency Class IE2 and constructive characteristics in conformity with UL – CSA – cURus norms. This is available only for e-motor with shaft in AISI 316. This means that A3 and RA versions fulfil already the UL-CSA-cURus norms, rather than the RZ and, RX versions that will need to be offered on request with extra costs to have the AISI 316 shaft e-motor in conformity with UL – CSA – cURus norms.

E-motor IEC B34 frame 90L compatible with the foot print of 90S e-motor. 90L is 2.2KW and 90S is 1.5KW. This permits an easy replacement of the former TRMB 32-50 1.5KW.

ACCESSORIES CHARACTERISTICS

Hydraulic optimization of a better anticavitation system. The anticaviation connection is closer to suction side and enhances the compression cycle ensuring a better efficiency at higher vacuum.

Anticavitation valve is available on request.

Anticavitation valve for cast iron pumps (RX) and similar is always in brass.

Anticavitation valve for stainless steel pumps (A3) and similar is always in stainless steel.

Domicilio Fiscale – Direzione – Stabilimento – Uffici:
20022 CASTANO PRIMO (MI) Italy – Via per Turbigo, 44 – Zona Industriale
Tel. 0331 889000 – Fax 0331 889090 – E-Mail sales@pompetravaini.it

Capitale Sociale. € 2.000.000. I.V. C.F. e Partita IVA IT 00692920150
REA n. 720774 della C.C.I.A.A. di Milano

MATERIALS OF CONSTRUCTION

Pump in standard materials RX and A3

Part	*RX material*	*A3 material*
E-MOTOR SHAFT	AISI 420	AISI 316
SHAFT KEY	AISI 316	AISI 316
IMPELLER LOCKING NUT	AISI 316	AISI 316
NORD-LOCK WASHER	AISI 316L	AISI 316L
SEAL RING	NITRILIC RUBBER	NITRILIC RUBBER
CASING	CAST IRON	AISI 316
CASING COVER	CAST IRON	AISI 316
HYDRAULCI PORTS PLATE	STAINLESS STEEL AISI 304	STAINLESS STEEL AISI 316
IMPELLER	STAINLESS STEEL AISI 304	STAINLESS STEEL AISI 316
VALVE PLATE	STAINLESS STEEL AISI 316	STAINLESS STEEL AISI 316
VALVE	TEFLON	TEFLON
VALVE SCREWS	STAINLESS STEEL AISI 316	STAINLESS STEEL AISI 316
LIQUID GASKET	SUPERBOND 539	SUPERBOND 539
CILINCRIC PIN	STAINLESS STEEL AISI 316	STAINLESS STEEL AISI 316
PLUGS	ACCIAIO AL CARBONIO	STAINLESS STEEL AISI 316
CASING SCREWS	CARBON STEEL	CARBON STEEL
E-MOTOR SCREWS	CRBON STEEL CLASS 10.9	CARBON STEEL CLASS 10.9
E-MOTOR	IE2 IEC 60034-30 NORM	IE2 IEC 60034-30 UL – CSA – URUS NORMS

ISO 9001

Domicilio Fiscale – Direzione – Stabilimento – Uffici:
20022 CASTANO PRIMO (MI) Italy – Via per Turbigo, 44 – Zona Industriale
Tel. 0331 889000 – Fax 0331 889090 – E-Mail sales@pompetravaini.it

Capitale Sociale. € 2.000.000. I.V. C.F. e Partita IVA IT 00692920150
REA n. 720774 della C.C.I.A.A. di Milano

PUMP NOMENCLATURE

TRMX 25 7 / 1 - C / RX / Z

- Pompetravaini construction
- Liquid ring vacuum pumps
- Construction type
  M = single stage pump with vary port design e-motor mounted
- With stainless steel plate in AISI 304 or AISI 316
- Suction and discharge connection ND
- Pump size
- Pump project
- Seal type
- Materials of construction
- Special executions

ISO 9001

Domicilio Fiscale – Direzione – Stabilimento – Uffici:
20022 CASTANO PRIMO (MI) Italy – Via per Turbigo, 44 – Zona Industriale
Tel. 0331 889000 – Fax 0331 889090 – E-Mail sales@pompetravaini.it

Capitale Sociale. € 2.000.000. I.V. C.F. e Partita IVA IT 00692920150
REA n. 720774 della C.C.I.A.A. di Milano

pompetravaini S.p.A.

www.pompetravaini.it

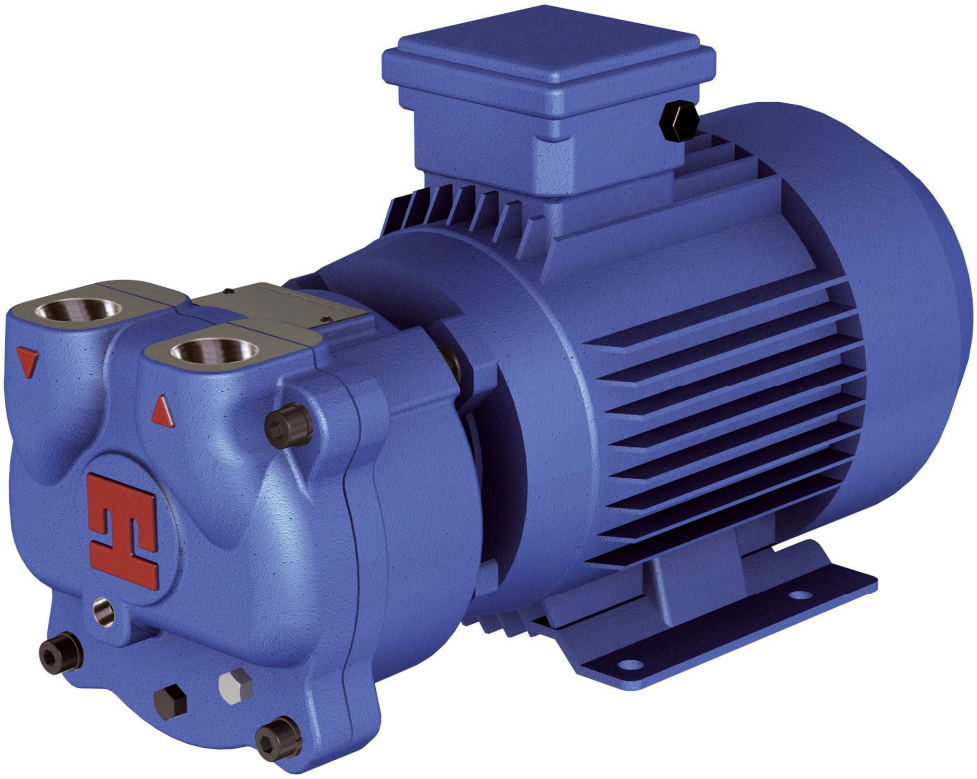

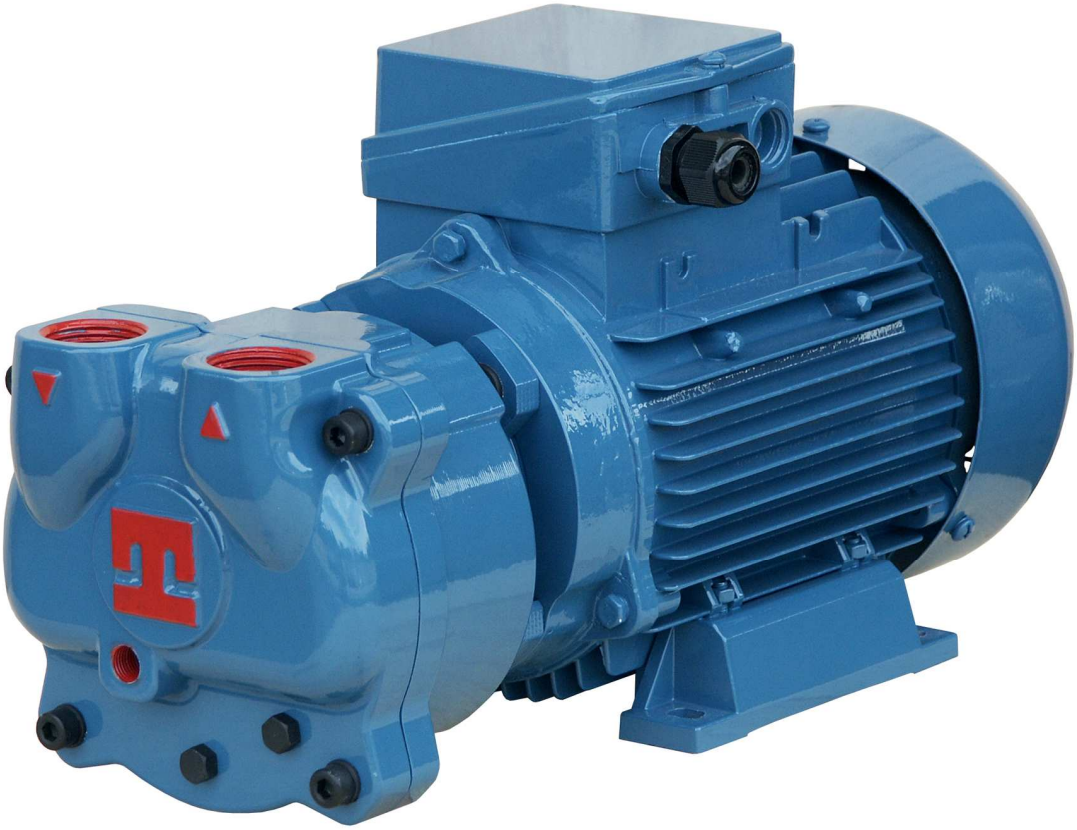

ISO 9001

Domicilio Fiscale – Direzione – Stabilimento – Uffici:
20022 CASTANO PRIMO (MI) Italy – Via per Turbigo, 44 – Zona Industriale
Tel. 0331 889000 – Fax 0331 889090 – E-Mail sales@pompetravaini.it

Capitale Sociale. € 2.000.000. I.V. C.F. e Partita IVA IT 00692920150
REA n. 720774 della C.C.I.A.A. di Milano

DIAGRAMMA DI FUNZIONAMENTO
Performance curves

POMPA PER VUOTO AD ANELLO DI LIQUIDO
Liquid ring vacuum pump

TIPO
Type

TRMX 257

pompetravaini S.p.A.
CASTANO PRIMO (MILANO)

I DATI RIPORTATI SONO RIFERITI A –		*Data refers to :*
ARIA SECCA A 20 °C	▬▬▬▬▬▬	*Dry air at 20 °C (68 °F)*
ARIA SATURA A 20 °C	- - - - - - - -	*Saturated air at 20 °C (68 °F)*
LIQUIDO DI ESERCIZIO	ACQUA – *Water*	*Service liquid*
TEMPERATURA LIQUIDO DI ESERCIZIO	15 °C – *(59 °F)*	*Service liquid temperature*
PRESSIONE DI SCARICO	1013 mbar	*Discharge pressure*
TOLLERANZE	10%	*Tolerance*
PORTATA PER COSTR. IN ACC. INOX	–10%	*Capacity for S.S. construction*

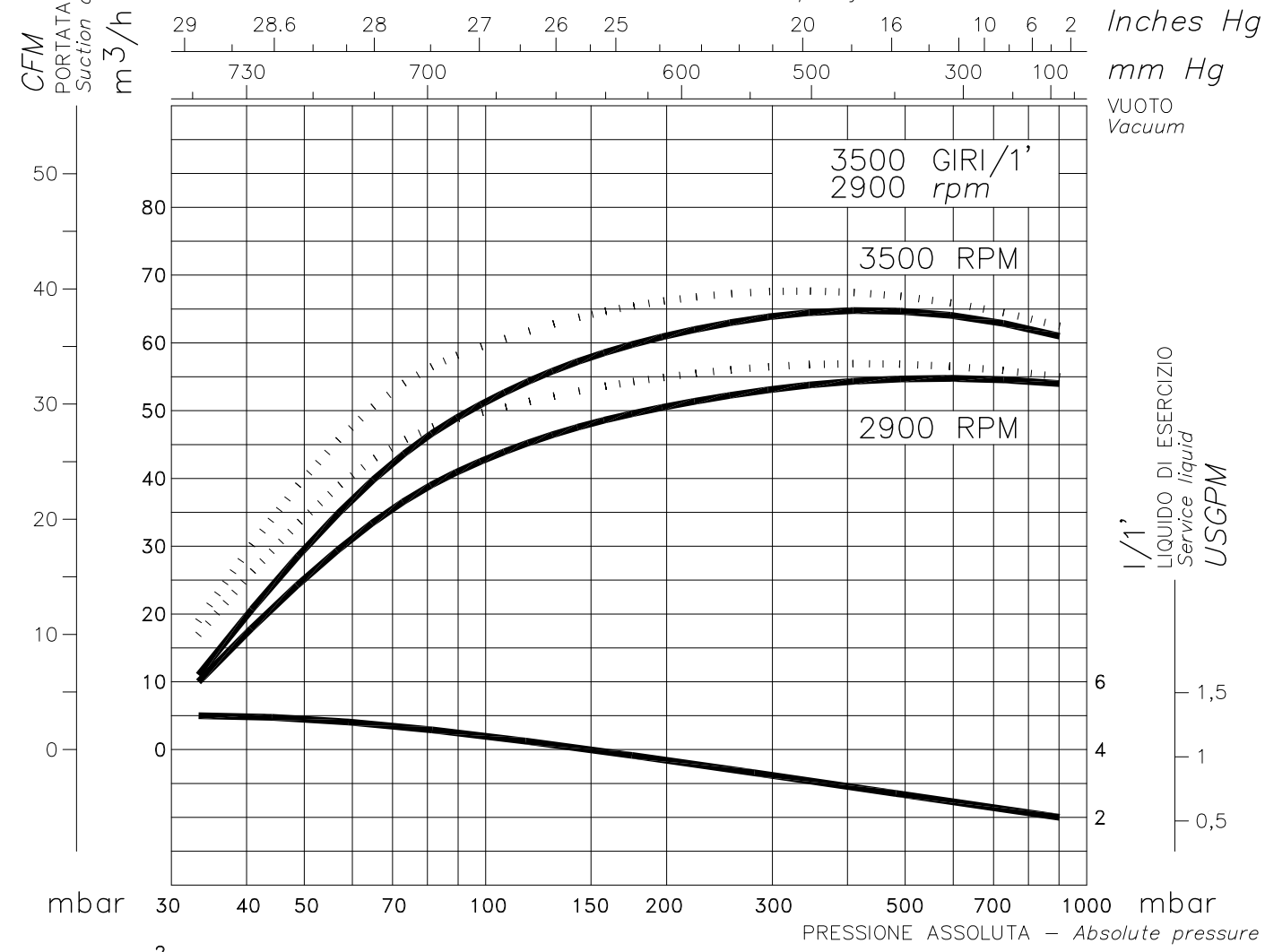

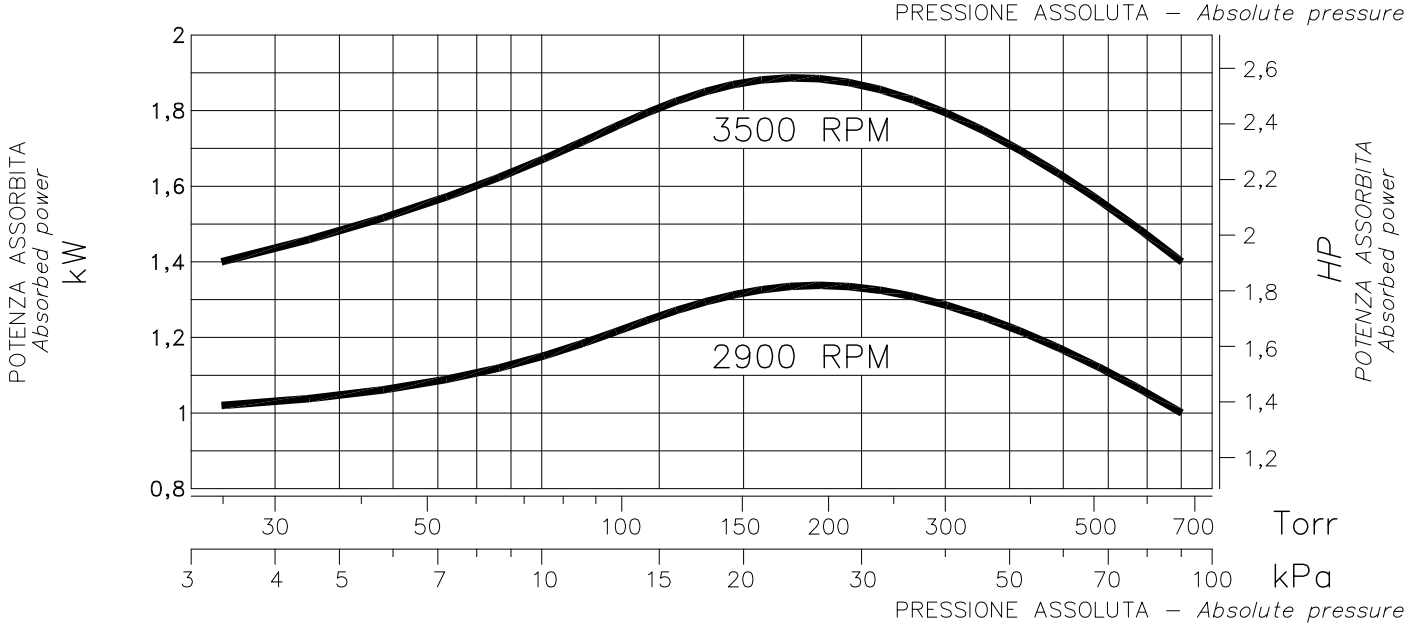

RIF.–*Ref.:* F.P./C.T.	DATA–*Date:* 01–2010	SOST.–*Repl.:*	N°.: 7507.B50.01.01–02

DIMENSIONE D'INGOMBRO / *Overall dimensions*
POMPE PER VUOTO AD ANELLO DI LIQUIDO
Liquid ring vacuum pumps
SERIE / *Series*
TRMX 257/1-C

pompetravaini S.p.A.
CASTANO PRIMO (MILANO)

Versione **MONOBLOCCO**

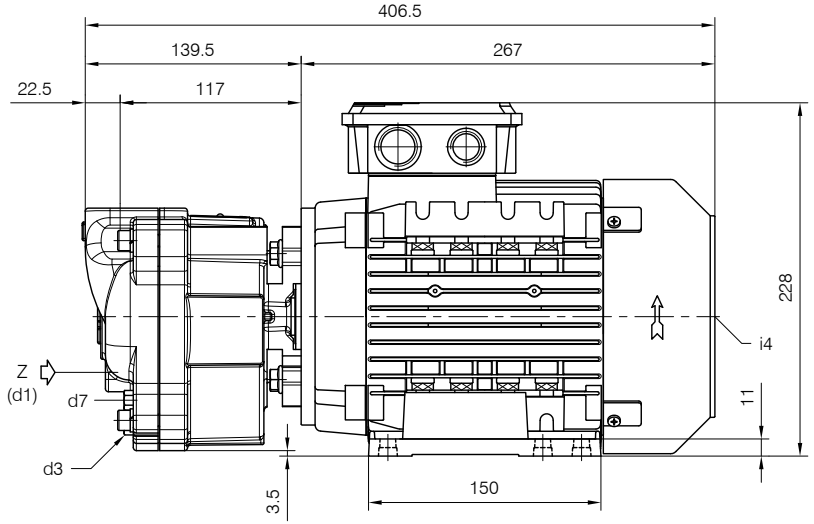

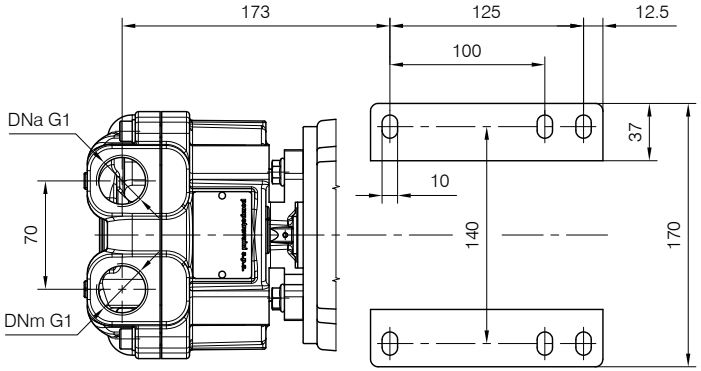

CLOSE-COUPLED *construction*

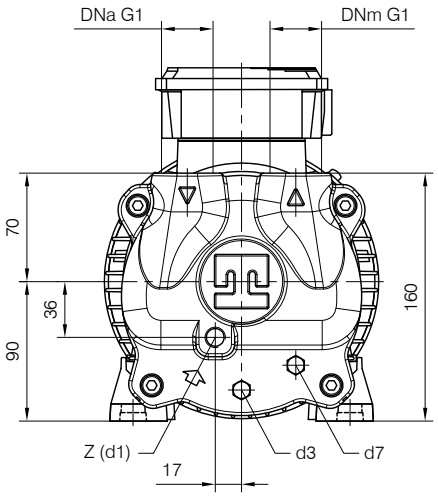

d1 Connessione filettata G 1/4 - per ingresso alimentazione
G 1/4 threaded connection - for liquid supply inlet

d3 Attacco tappato G 1/8 - per scarico corpo pompa
G 1/8 plugged connection - for pump casing drain

d7 Attacco tappato G 1/8 - per valvola anticavitazione
G 1/8 plugged connection - for anticavitation valve

i4 Foro filettato per controllo rotazione albero motore
Threaded hole for motor shaft rotation checking

POMPA TIPO *Pump type*	Peso *Weight*	Mi *kgm²*	Lt
TRMX 257	25	0.006	0.4

Nota / *Note* :

Lt Quantità di acqua all'asse dell'albero in litri
Water quantity at shaft axis in liters

Mi Momento di Inerzia Max all'avviamento
Max Moment of Inertia at start-up

MOTORE ELETTRICO MULTIFREQUENZA *Multi-frequency Electric Motor* IP 55 - 2 poli / *poles - 50/60 Hz*				
Grandezza *Frame size* IEC	Giri/min. *RPM* 2900 50Hz V. 230-400		Giri/min. *RPM* 3500 60Hz V. 265-460 V. 230-400	
	kW	HP	kW	HP
90 L	2.2	3	2.2	3

Disegno schematico. Dimensioni in mm con tolleranze secondo **EN 735**-1995.
Pesi indicativi in Kg, riferiti a pompe in ghisa, non impegnativi.
*Schematic drawing. Dimensions in mm with tolerances according to **EN 735**-1995 standards.*
Weights in Kgs, referred to pumps in cast iron, not binding.

RIF. – *Ref.:* S.V./C.T.
DATA – *Date:* 07–2010
DOCUMENTO N. – *Document no.:* 7507.1L7.2001.01.01
SOSTITUISCE DOC. – *Replaces Doc.* (ITEM): – (–)
ITEM n° D00121R

DISEGNO IN SEZIONE / *SECTION DRAWING*
Pompe Serie / *Pumps Series*

TRMX 257/1-C

pompetravaini S.p.A.
CASTANO PRIMO (MILANO)

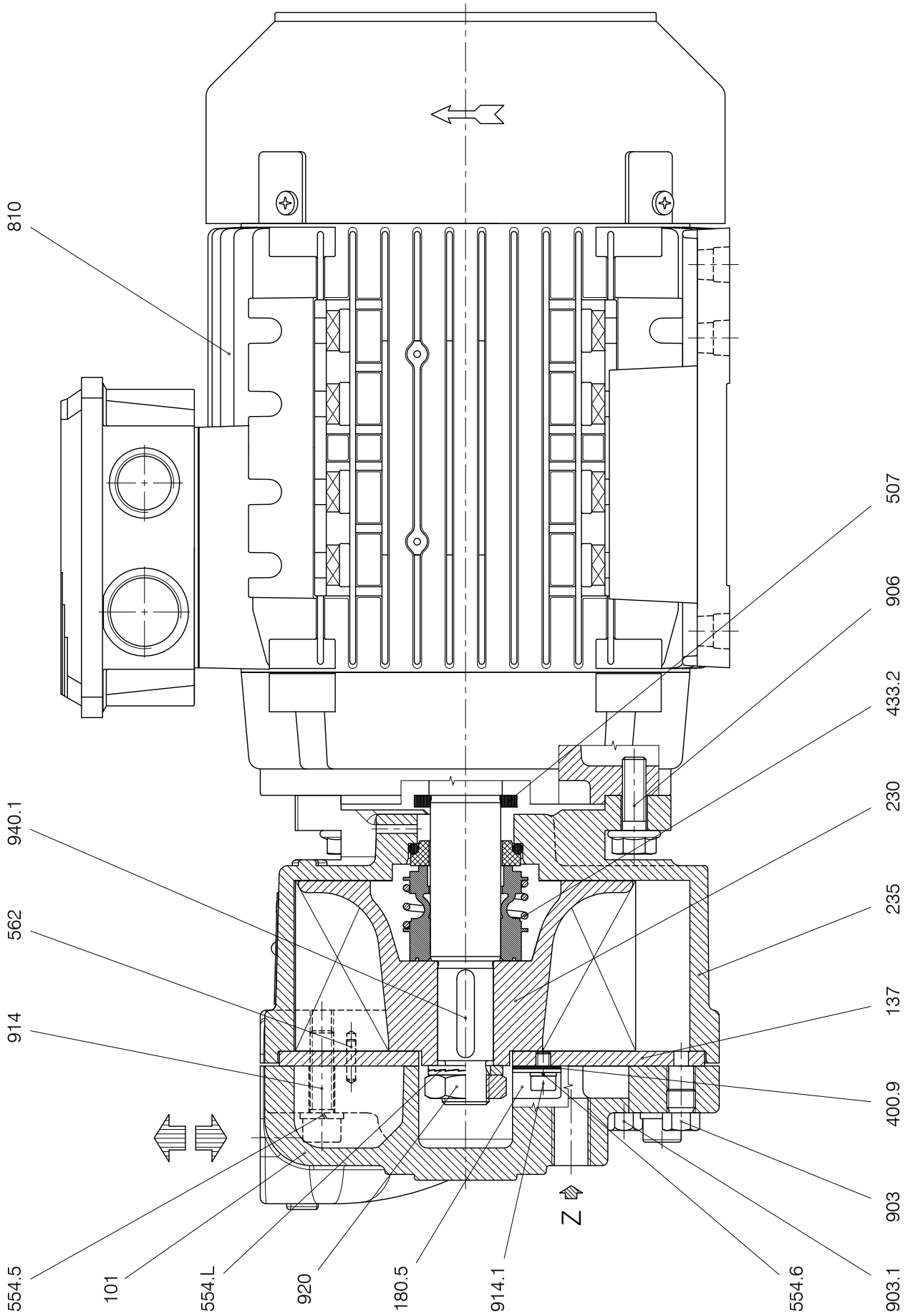

RIF.–*Ref.:* S.V./C.T.	DOCUMENTO N. – *Document no.:* 7507.1L7.3001.01	ITEM n° S00037R
DATA –*Date:* 03–2010	SOSTITUISCE DOC. – *Replaces Doc.* (ITEM): –	

NOMENCLATURA generica dei COMPONENTI delle pompe

pompetravaini

VDMA	DENOMINAZIONE	VDMA	DENOMINAZIONE	VDMA	DENOMINAZIONE
101	*Corpo pompa*	355	*Supporto bronzina*	639	*Indicatore livello olio*
102	*Corpo a spirale*	357...	*Scatola cusc. e tenuta mecc.*	640	*Oliatore livello costante*
103	*Corpo intermedio aspir / prem.*	357.S	*Scatola cusc. e tenuta mecc. lato opposto comando*	643	*Astina livello olio*
106	*Corpo aspirante*	358	*Supporto contenitore cusc.*	672…	*Rubinetto*
107	*Corpo premente*	360...	*Coperchio cuscinetto*	680	*Lamiera protezione*
108...	*Elemento*	365...	*Lamierino protezione cuscinetto*	681	*Lamiera protezione giunto*
109...	*Elemento aspirante*	375.1	*Anello arresto supporto*	685	*Rete protezione*
110...	*Distanziale*	375.2	*Coperchi supporto*	701	*Tubetto circolazione*
111	*Corpo autoadescante*	383	*Guida intermedia verticale*	707	*Tubetto circolazione*
113	*Corpo intermedio*	400...	*Guarnizione*	711...	*Tubo di sostegno*
114...	*Elemento premente*	411...	*Anello V-Ring*	713	*Tubo di mandata*
116	*Camera raffreddamento*	412...	*Anello O-Ring*	721	*Flangia alimentazione*
120	*Corpo posteriore*	421...	*Anello tenuta radiale*	723	*Flangia*
132	*Volano*	423...	*Anello tenuta radiale a labirinto*	724	*Flangia cieca*
134	*Contrasto*	433...	*Tenuta meccanica*	725	*Cartella*
135...	*Piastra usura*	434...	*Tenuta meccanica radiale*	730	*Gomito*
137	*Elemento*	441...	*Camera tenuta meccanica*	731...	*Raccordo*
137.1	*Elemento aspirante*	442	*Piastra tenuta meccanica*	734	*Nipplo M.F.*
137.2	*Elemento premente*	450...	*Boccola camera*	735	*Nipplo M.M.*
137.3	*Elemento aspirante*	451...	*Camera treccia*	736	*Nipplo*
137.4	*Elemento premente*	452...	*Premitreccia ovale*	745	*Filtro*
138	*Tronchetto aspirante*	455	*Premitreccia tondo*	800	*Motore*
140...	*Elemento intermedio*	458	*Anello sbarramento*	801	*Motore flangiato*
141	*Elemento separatore*	460	*Occhiale premitreccia*	806	*Riduttore*
142	*Elemento di flussaggio*	461...	*Anello treccia*	818G	*Gruppo trascinam. magnetico*
147	*Collettore*	462	*Anello treccia interno*	853	*Giunto a gusci*
147.5	*Collettore separatore*	465	*Camera treccia verticale*	861...	*Semigiunto*
149...	*Diffusore*	471...	*Coperchio tenuta meccanica*	867	*Tassello giunto*
150	*Corpo diffusore*	475	*Anello stazionario flangiato*	869	*Giunto spaziatore*
161	*Coperchio corpo*	485...	*Anello arresto tenuta mecc.*	892…	*Spessore*
162	*Coperchio aspirante*	486	*Sfera*	900...	*Vite T.P.S.*
163	*Lanterna coperchio*	489	*Anello bloccaggio seggio*	900.5	*Golfare*
165	*Coperchio raffreddamento*	502...	*Anello usura*	901...	*Vite T.E.*
167	*Piastra raffreddamento*	504	*Anello distanziale*	901.7	*Bullone*
180.5	*Piastra valvole*	505...	*Anello spallamento*	902...	*Prigioniero*
180.6	*Coperchio di chiusura*	506	*Anello arresto*	903...	*Tappo*
183...	*Piede appoggio*	506.1	*Segmento bloccaggio girante*	904...	*Grano*
184	*Flangia riduzione*	506.2	*Anello bloccaggio girante*	905...	*Tirante*
185	*Flangia motore*	507...	*Anello paraspruzzi*	911	*Tappo riempimento*
187	*Piastra appoggio*	510	*Anello lancia olio*	914...	*Vite T.C.E.I.*
187.1	*Lamiera protezione supporto*	521	*Bussola distanziale girante*	920...	*Dado*
210	*Albero*	522	*Bussola arresto tenuta mecc.*	921	*Dado ogivale*
210.1	*Albero condotto*	523	*Bussola tenuta meccanica*	922...	*Dado bloccaggio girante*
230...	*Girante*	524	*Bussola baderna*	923...	*Ghiera*
230.2	*Girante centrifuga rotaz. sinistra*	525	*Bussola distanziale*	924...	*Bussola bloccaggio*
231	*Girante autoadescante*	527	*Bussola tenuta*	925	*Dado con calotta*
235	*Coperchio girante*	530	*Bussola porta cuscinetto*	932...	*Anello Seeger*
303	*Porta cuscinetto verticale*	542...	*Boccola tenuta*	934	*Filetto riportato*
310...	*Bronzina*	543	*Bussola distanziale piastra*	935	*Anello elastico*
310.2	*Bussola porta boccola*	550	*Anello di fondo*	940...	*Linguetta*
311	*Bronzina*	551	*Disco con orifizio*	955	*Molla ad elica*
320...	*Cuscinetto 1 corona di sfere*	554…	*Rondella*	991	*Valvola di controllo / regolaz.*
321...	*Cuscinetto 2 corone di sfere*	554.5	*Rondella elastica*		
322	*Cuscinetto 2 corone di rulli*	554.L	*Rondella antisvitamento*		
323...	*Cuscinetto 1 corona di rulli*	560	*Spina elastica tenuta mecc.*		
330	*Supporto doppio*	561	*Spina elastica*		
341	*Lanterna*	562...	*Spina*		
345	*Lanterna con piedi*	635	*Ingrassatore a sfera*		
350...	*Supporto*	636	*Ingrassatore*		
353	*Supporto flangiato*	637	*Tappo carico olio*		

DISEGNO IN SEZIONE / *SECTION DRAWING*
Pompe Serie / *Pumps Series*

TRMX 257/1-C

pompetravaini S.p.A.
CASTANO PRIMO (MILANO)

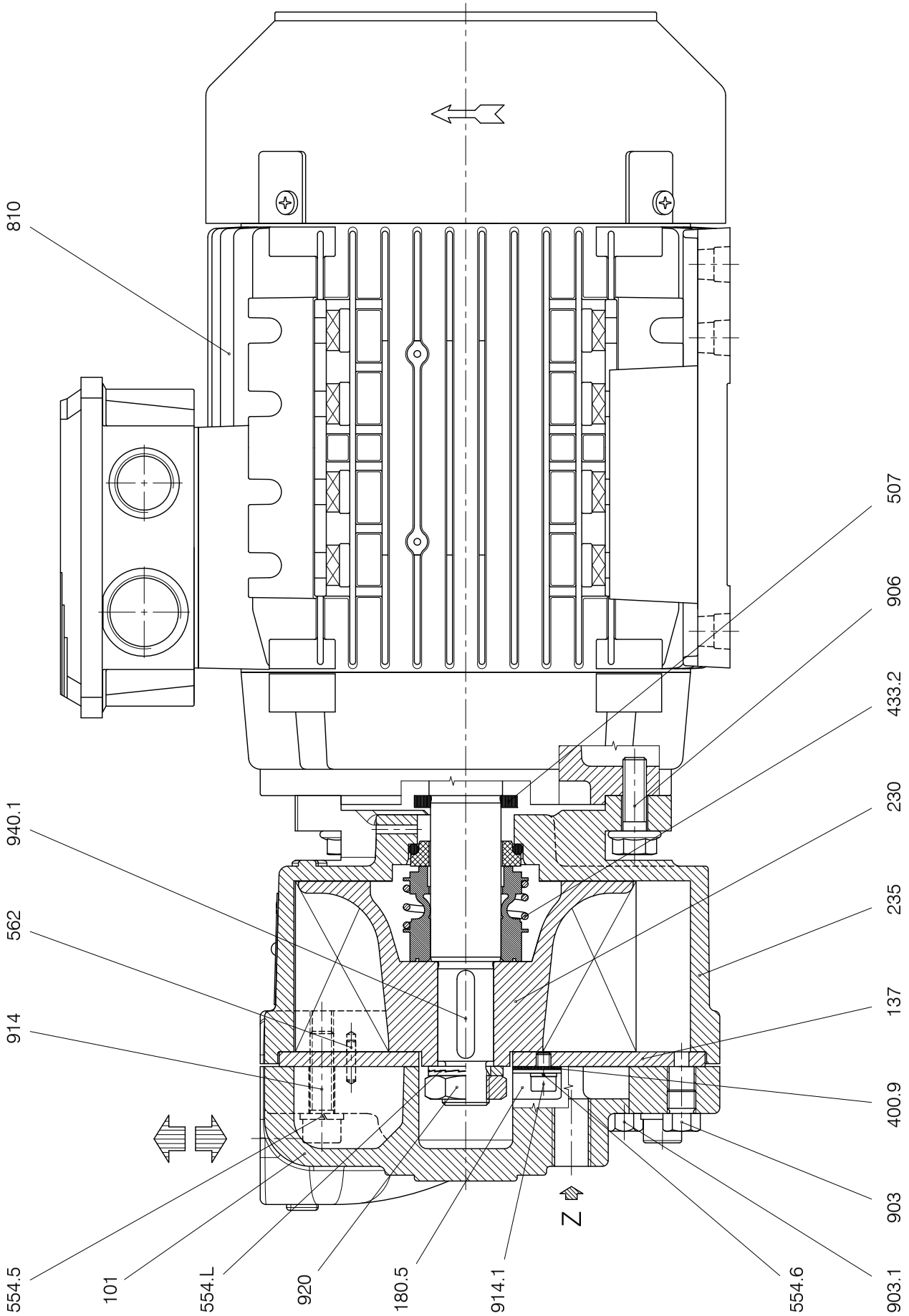

RIF.–*Ref.:* S.V./C.T.	DOCUMENTO N. – *Document no.:* 7507.1L7.3001.01	ITEM n° S00037R
DATA –*Date:* 03–2010	SOSTITUISCE DOC. – *Replaces Doc.* (ITEM): –	

Generic NOMENCLATURE of pump COMPONENTS

pompetravaini

VDMA	DESCRIPTION	VDMA	DESCRIPTION	VDMA	DESCRIPTION
101	*Casing*	355	*Sleeve bearing housing*	639	*Oil sight gauge*
102	*Volute casing*	357...	*M.S. and bearing housing*	640	*Constant level oilier*
103	*Suction/discharge intermediate casing*	357.S	*Non drive end bearing housing*	643	*Oil dipstick*
106	*Suction casing*	358	*Bearing housing*	672…	*Cock*
107	*Discharge casing*	360...	*Bearing cover*	680	*Guard*
108...	*Stage casing*	365...	*Bearing shield*	681	*Sheet metal coupling guard*
109...	*Suction Stage casing*	375.1	*Spacer*	685	*Mesh guard*
110...	*Impeller casing*	375.2	*Bearing housing cover*	701	*Circulation tubing*
111	*Priming stage casing*	383	*Vertical intermediate guide*	707	*Circulation tubing*
113	*Intermediate casing*	400...	*Gasket*	711...	*Piping stand*
114...	*Channel stage casing*	411...	*V-Ring*	713	*Discharge pipe*
116	*Cooling housing*	412...	*O-Ring*	721	*Suction flange*
120	*Rear casing*	421...	*Radial seal ring*	723	*Companion flange*
132	*Fly-wheel*	423…	*Labyrinth radial seal ring*	724	*Blind flange*
134	*Side plate*	433...	*Mechanical seal*	725	*Collar*
135...	*Wear plate*	434...	*Radial mechanical seal*	730	*Elbow*
137...	*Suction & discharge plates*	441...	*Mechanical seal housing*	731...	*Fitting*
137.1	*Suction plate*	442	*Mechanical seal cover*	734	*M.F. Fitting*
137.2	*Discharge plate*	450...	*Cooling insert*	735	*M.M. Fitting*
137.3	*Suction plate*	451...	*Packing seal housing*	736	*Nipple*
137.4	*Discharge plate*	452...	*Oval gland flange*	745	*Filter*
138	*Suction fitting*	455	*Gland insert*	800	*Electric motor*
140...	*Intermediate plate*	458	*Lantern ring*	801	*Flanged motor*
141	*Separator plate*	460	*Gland*	806	*Reducer*
142	*Flushing plate*	461...	*Packing ring*	818.G	*Magnetic coupling assembly*
147	*Manifold*	462	*Inner packing ring*	853	*Shell type coupling*
147.5	*Separator manifold*	465	*Vertical packing seal housing*	861...	*Half coupling*
149...	*Diffuser*	471...	*Mechanical seal cover*	867	*Coupling insert*
150	*Diffuser housing*	475	*Stationary flanged ring*	869	*Spacer coupling*
161	*Casing cover*	485...	*M.S. locating ring*	892	*Raising pad*
162	*Suction cover*	486	*Ball*	900...	*Screw*
163	*Casing cover*	489	*Stationary retaining ring*	900.5	*Eyebolt*
165	*Cooling cover*	502...	*Wear ring*	901...	*Screw*
167	*Cooling plate*	504	*Spacer*	901.7...	*Bolt*
180.5	*Valves plate*	505...	*Shoulder ring*	902...	*Stud*
180.6	*Metal cover*	506	*Locking ring*	903...	*Plug*
183...	*Support foot*	506.1	*Impeller split locking ring*	904...	*Grub screw*
184	*Adapting flange*	506.2	*Impeller locking ring*	905...	*Tie bolt*
185	*Motor flange*	507...	*Thrower*	911	*Filling plug*
187	*Support plate*	510	*Oil splash ring*	914...	*Screw*
187.1	*Housing guard*	521	*Impeller spacer sleeve*	920...	*Nut*
210	*Shaft*	522	*M.S. spacer sleeve*	921	*Impeller nut*
210.1	*Auxiliary shaft*	523	*M.S. shaft sleeve*	922...	*Locking impeller nut*
230...	*Impeller*	524	*Packing shaft sleeve*	923...	*Bearing nut*
230.2	*Left rotation centrifugal impeller*	525	*Spacer sleeve*	924...	*Locking sleeve*
231	*Priming impeller*	527	*Seal shaft sleeve*	925	*Self locking nut*
235	*Impeller cover*	530	*Bearing sleeve*	932...	*Circlip*
303	*Vertical bearing housing*	542...	*Throttling bushing housing*	934	*Heli-coil*
310...	*Bearing bushing*	543	*Plate spacer*	935	*Wafer ring*
310.2	*Bearing bushing*	550	*Bottom ring*	940...	*Key*
311	*Bearing bushing*	551	*Insert with orifice*	955	*Helicoidal spring*
320...	*Single ball bearing*	554…	*Washer*	991	*Ball float valve*
321...	*Double ball bearing*	554.5	*Spring washer*		
322	*Double roller bearing*	554.L	*Anti-unscrewing washer*		
323...	*Single roller bearing*	560	*M.S. elastic pin*		
330	*Bearing housing*	561	*Elastic pin*		
341	*Motor lantern*	562...	*Cylinder pin*		
345	*Frame with feet*	635	*Grease nipple*		
350...	*Bearing housing*	636	*Grease cup*		
353	*Flanged bearing bracket*	637	*Oil filling plug*		